MORE TO SEE SPIEGEL RECHTHOEK

PRODUCTINFORMATIE

Artikeltitel	Villeroy & Boch More To See Spiegel, 500 x 750 x 20 mm
Artikelnummer	A3105000
Montage / Montagetype	wandmontage
Onderdelen van de levering	1 x spiegel , 1 x bevestigingsset
Diepte in mm	20
Breedte in mm	500
Hoogte in mm	750
Collectie	More To See
Materiaal	Glas
Vorm	Rechthoek
Met verlichting	Nee
Smart Home-compatibel	Nee

TECHNISCHE TEKENINGEN

A3105000

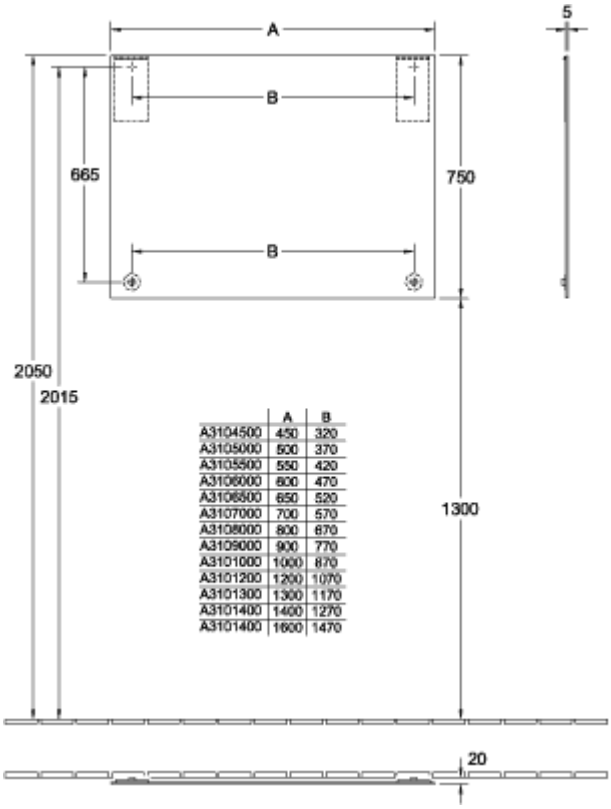

	A	B
A3104500	450	320
A3105000	500	370
A3105500	550	420
A3106000	600	470
A3106500	650	520
A3107000	700	570
A3108000	800	670
A3109000	900	770
A3101000	1000	870
A3101200	1200	1070
A3101300	1300	1170
A3101400	1400	1270
A3101400	1600	1470

A3105000

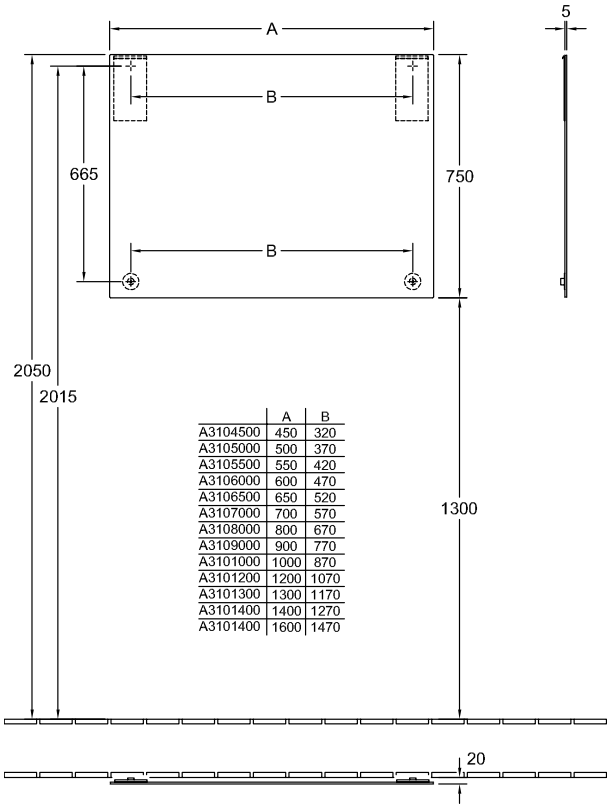

	A	B
A3104500	450	320
A3105000	500	370
A3105500	550	420
A3106000	600	470
A3106500	650	520
A3107000	700	570
A3108000	800	670
A3109000	900	770
A3101000	1000	870
A3101200	1200	1070
A3101300	1300	1170
A3101400	1400	1270
A3101400	1600	1470